Electronics for FNAL LAr mini-TPC

Yale LAr TPC Workshop
July 12, 2006

Carl Bromberg and Dan Edmunds
Michigan State University

FNAL LAr mini-TPC (~ 20 liters active)

- Why should FNAL duplicate ICARUS ancient history, and build small LAr-TPC devices?
  - Logical next step after purity monitor success
  - Get system experience with ~200 channels of Preamp w/bias voltage, Amplifier, Digitizer/DAQ, and HV, test pulse, etc.
  - Use "off-the-shelf" (not custom) electronics with documented electronics costs, and US accounting
  - Cosmic-ray muon TRACK DATA to normalize simulation efforts
  - TRACKS may prompt a (+) decision on the future of LAr in the US
  - Follow initial tests with investigation of cold (80 - 140K) Preamps
- FNAL LAr mini-TPC activity to be described here
  - Observed simulated TPC signal with available electronics
  - Characterized noise spectrum with non-optimized components
  - General comparison with ICARUS electronics

Hybrid preamplifier

D-zero Run-II

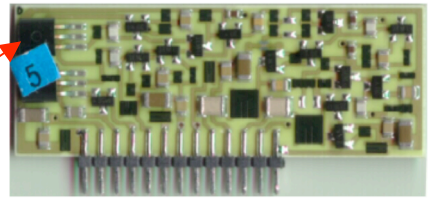

Dual FET input stage

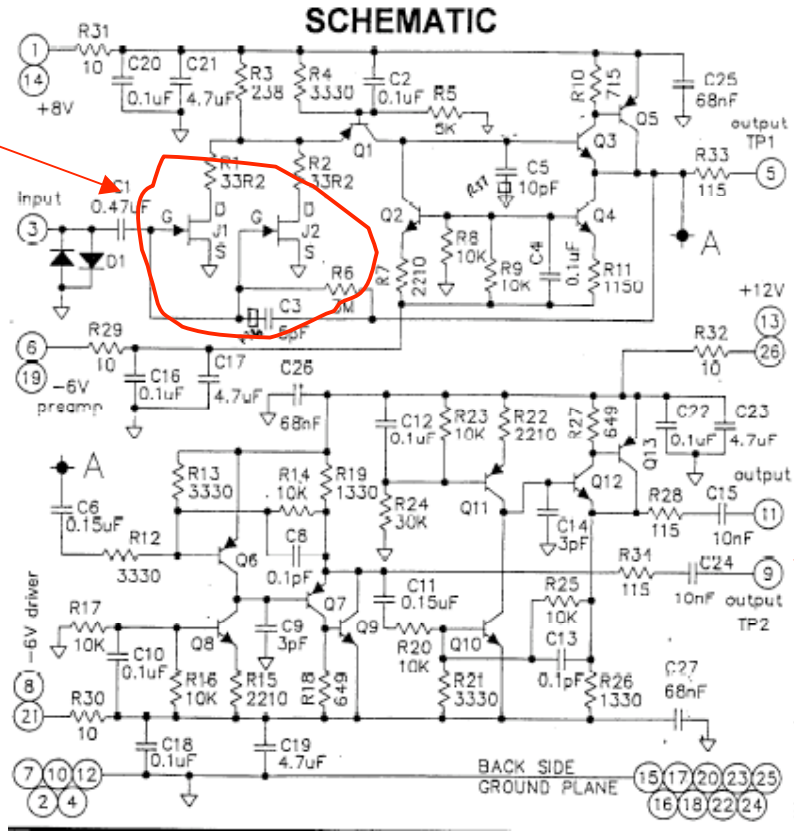

Output

Analog to digital conversion & data storage

D-zero Run-II
ADF-2 card

Sampling ADC

FPGA data storage
Field Programmable

Example: 2048 samples @ 197 ns

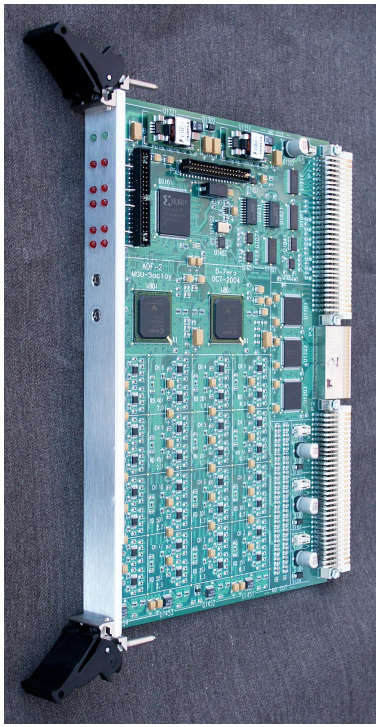

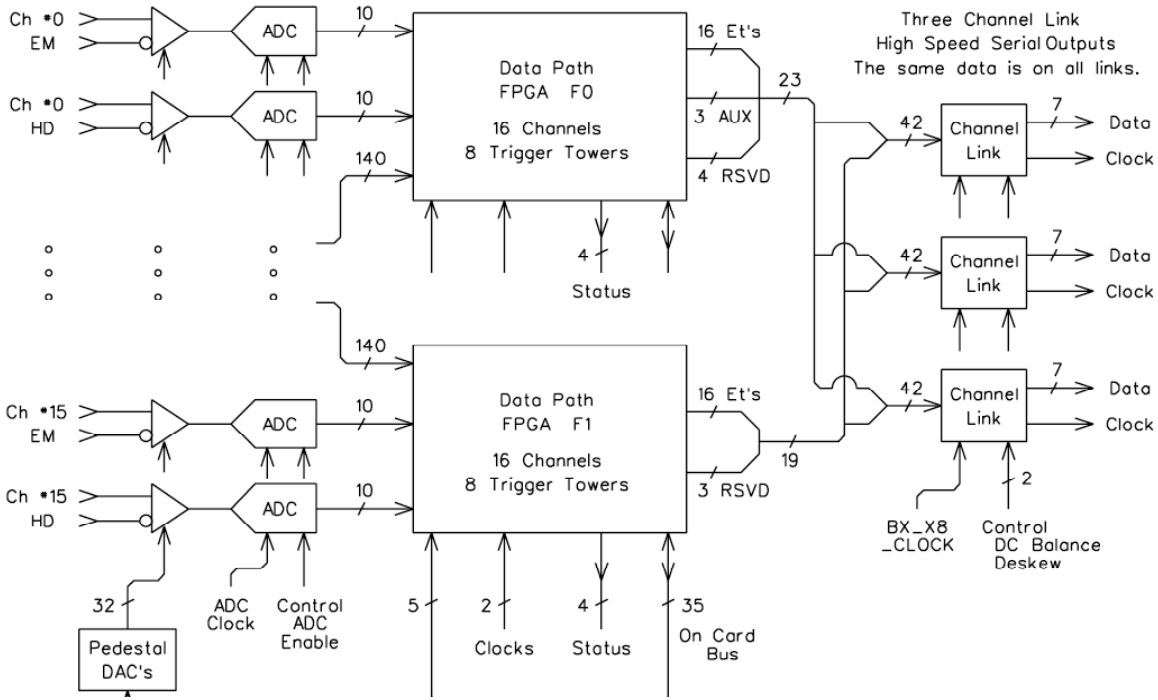

Dan will fill in details this afternoon

Single channel test setup

22,000 electron signal shape 150 kHz sine

On trigger take samples every 197 ns

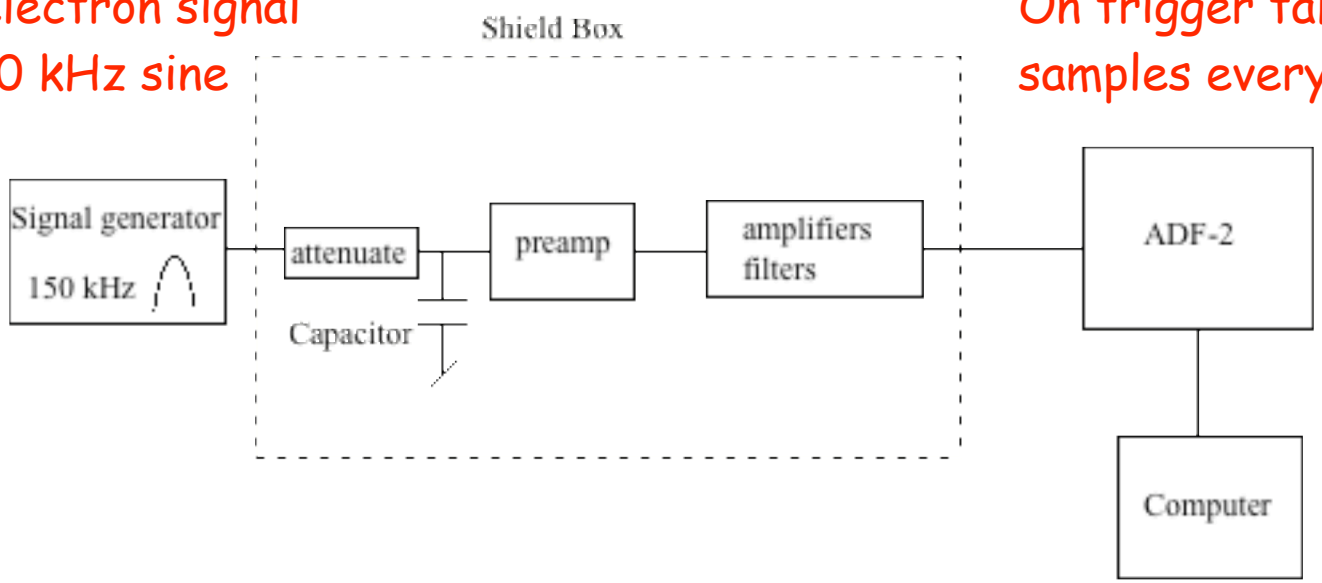

Read out 2048 samples

22,000 electron signal

Capacitance 0-pf

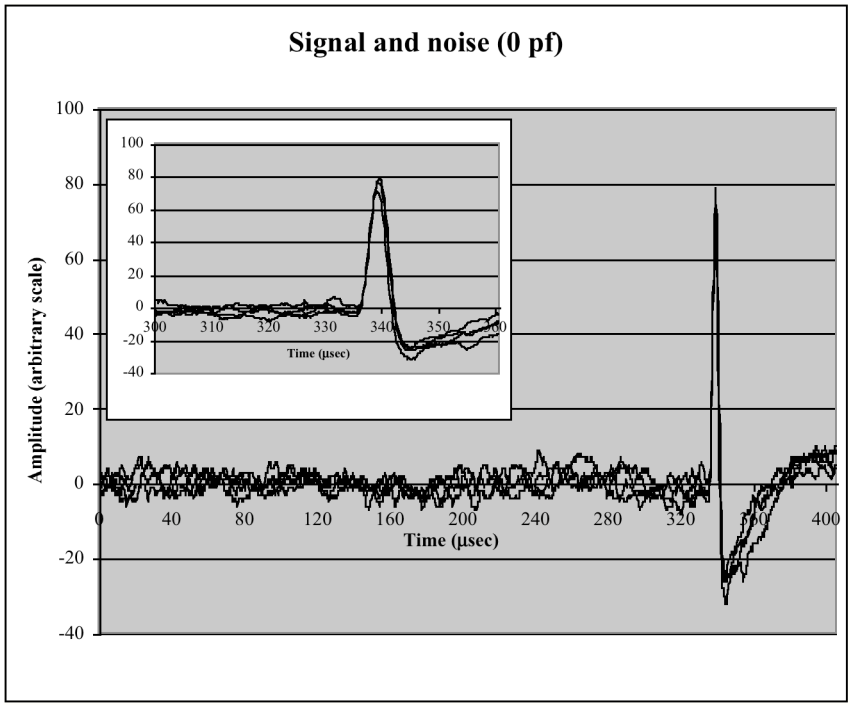

Capacitance 600-pf

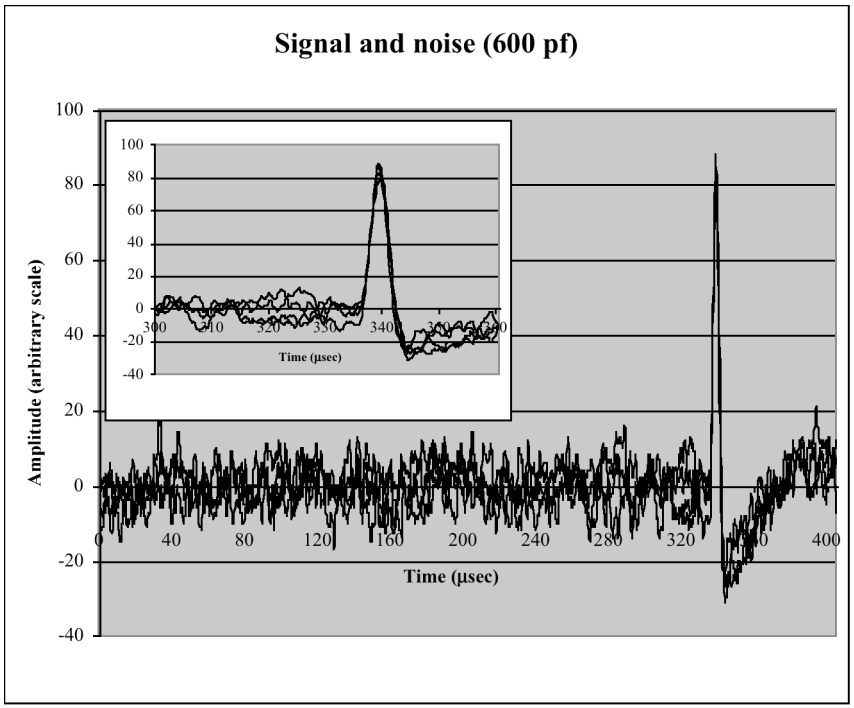

Noise spectrum

High pass & low pass filtered

22,000 electron LAr TPC signal

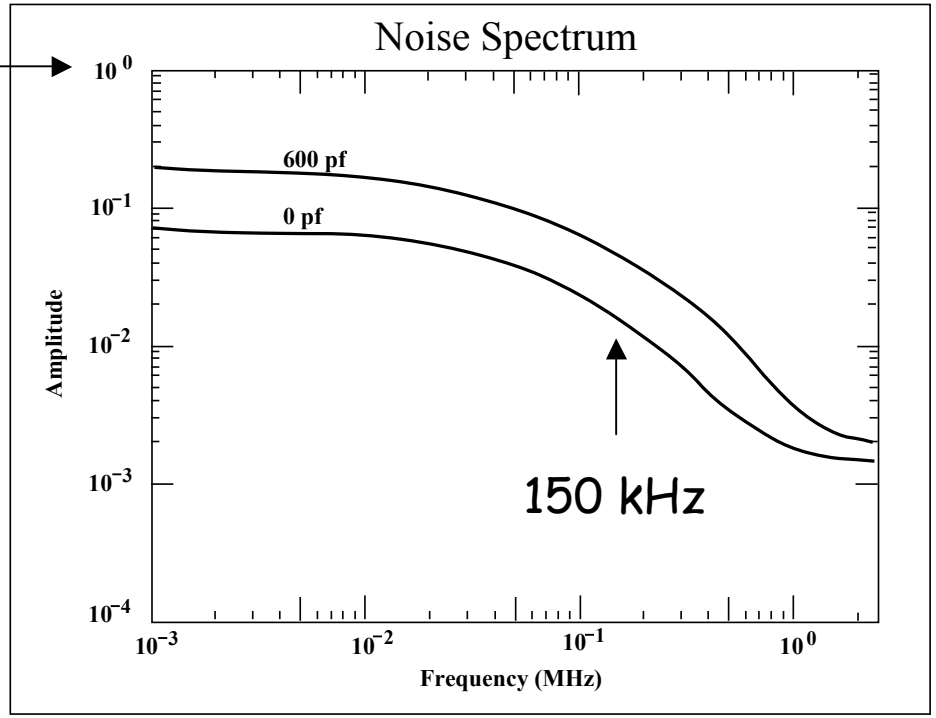

mini-TPC schedule

Small team from FNAL & MSU

- Prepare Dewar (Bo)
  - Select/build signal feed-through
  - Select/build HV feed-through
  - Implement continuous purification
- Assemble TPC and cables to feed-through
- Electronics
  - Motherboards (hybrid preamp, bias voltage, amplifier, test pulse)
  - Shield box
  - ADF2 system checkout
- Muon trigger counters
- Hope to have it all together this Fall.

Other simple tests of wire signals

Characterize wire source

No cross talk on neighboring wires.

Capacitance ~ 6 pf/m

Dispersion of signal from far end.

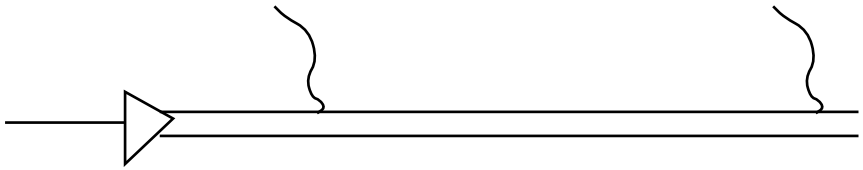

SS Wire resistance ~100 Ohms/m

Johnson Noise (resistance generated)

ICARUS uses SS wires

Why not CuBe wires
~5 Ohms/m?

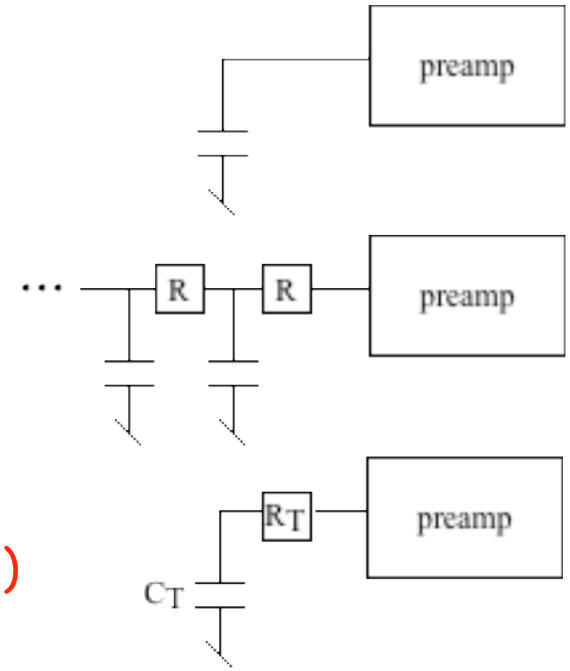

Normal noise

Worse noise

Even worse noise

Looks like a real issue
for very long wires (> 10 m)

Johnson noise a topic for discussion this afternoon

Workshop this afternoon

- Dan Edmunds start us off with discussions of
  - ADF2 digitizer and its data "handling" capabilities
  - Johnson noise observation
  - Cryogenic Preamps
    - Systems in use & previous R&D
    - Gains vs. risks (Is say 30% improvement in S/N worth it?)
- Please comment on additional subjects of concern, such as:
  Cable choices, electronics density, feed-through designs, online pattern recognition, exotic triggers (proton decay, supernova neutrinos, ...), FPGA magic